mahlo
trendsetting technology. worldwide.
since 1945

ECOPAC® EMC-15

Control system for drying processes

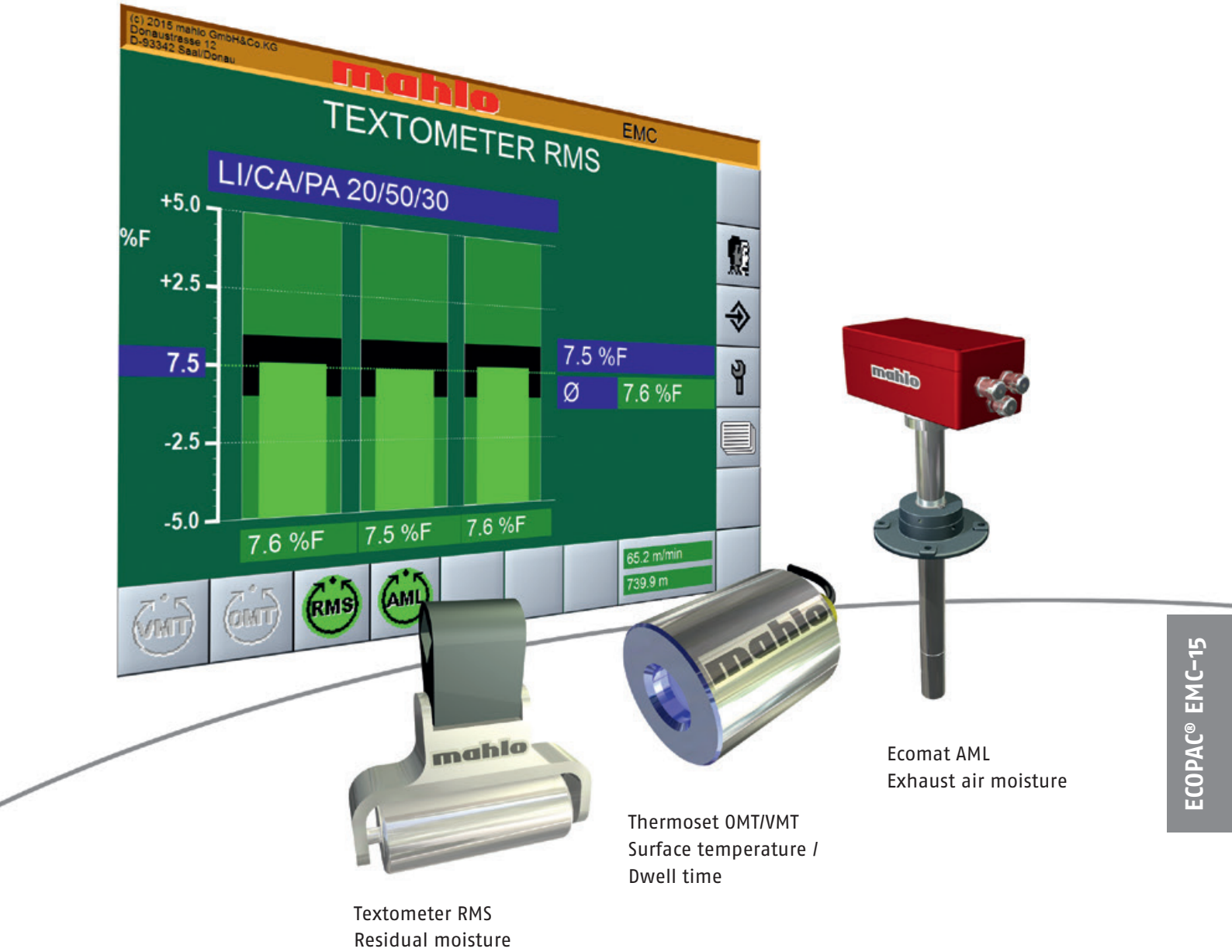

Ecomat AML
Exhaust air moisture

Thermoset OMT/VMT
Surface temperature /
Dwell time

Textometer RMS
Residual moisture

ECOPAC® EMC-15

Quality made
in Germany

TEXTILE NONWOVEN COATING & CONVERTING PAPER EXTRUSION

CONTROL SYSTEM FOR DRYING PROCESSES

TEXTILE NONWOVEN COATING & CONVERTING PAPER EXTRUSION

ECOPAC® EMC-15

A modular system ensuring product quality and optimising the energy balance.

Mahlo straightening and process control system for drying processes

Area of application

Textile manufacturers and finishers fight with rising production and energy costs, declining profit margins, shorter production times as well as higher requirements on quality and flexibility. Cost-efficient and quality-focused textile outfitting thus becomes increasingly important. Sustained production and the trend to higher-quality, technically sophisticated textiles also play a major role.

The efficiency of the production plants can be drastically increased through suitable measuring and control technology from Mahlo. This means, at the same time, increased productivity with usually improved reproducible quality, optimised raw materials usage and work effort accompanied by clearly improved plant utilisation.

Regardless of the challenges of the textile industry – Mahlo has the right solutions ready. The broad range of applications for the textile industry by Mahlo is based on experience reaching back to the year 1945.

The Ecopac EMC is a modular process control system for textile refinement. It optimises drying or fixing processes as well as the processes all about the stenter.

Product highlights

- ✓ A single system controls all essential dryingprocess parameters
- ✓ Intuitive user interface
- ✓ Easy to install

The system measures, logs and regulates critical process parameters such as the following over the entire working with:

- Temperature
- Dwell time
- Residual moisture
- Exhaust air moisture

This increases quality and saves resources and energy. The modular design of the system allows its flexible adaptation to all applications. Both, standard requirements and highly customized demands are thus met.

Improved product quality, saving of resources and energy as well as optimisation of the production processes in a single step: with the process control system Ecopac EMC from Mahlo.

Benefits for the customer

✓ Guaranteed product quality
✓ Optimum energy balance on drying processes

TABLE OF CONTENTS

mahlo
trendsetting technology. worldwide.

Principle of operation

Mahlo straightening and process control system for drying processes

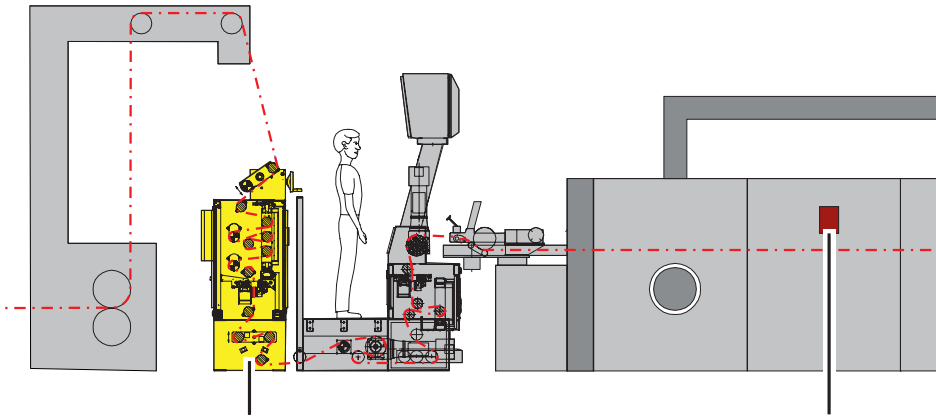

The Ecopac is a modular process control system for a variety of important parameters of drying processes. Different intelligent sensors can be connected to the base unit via a bus connection.

Different process parameters can be measured, visualized, controlled and documented by means of special software packages, e.g. Printserver.

The touchscreen of the system displays the measurements. Individually modifiable displays of the measured values facilitate easy monitoring of the complete process by the user.

Configurable alarm settings always monitor the background applications. A switching option allows bringing the respective application desired to the foreground.

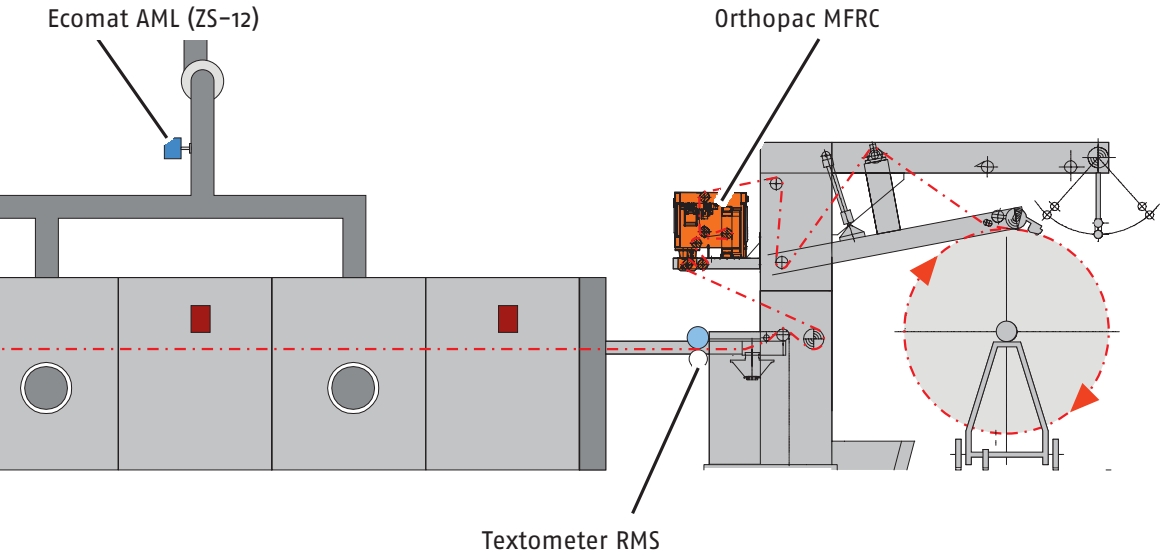

Sensor overview

Sensors		Measurand	Control variable
Thermoset	OMT	Surface temperature	Product web speed
Permaset	VMT	Surface temperature Temperature trend Dwell time	Product web speed
Textometer	RMS	Residual moisture	Product web speed
Ecomat	AML	Exhaust air humidity	Fan speed, flap opening

BASIS

VISUALIZATION

EVERYTHING AT A GLANCE

All entries are made directly on the touchscreen using large, ergonomic buttons. Operation is simple and intuitive. All the key information is visible at a glance.

Visualization and operation per touchscreen

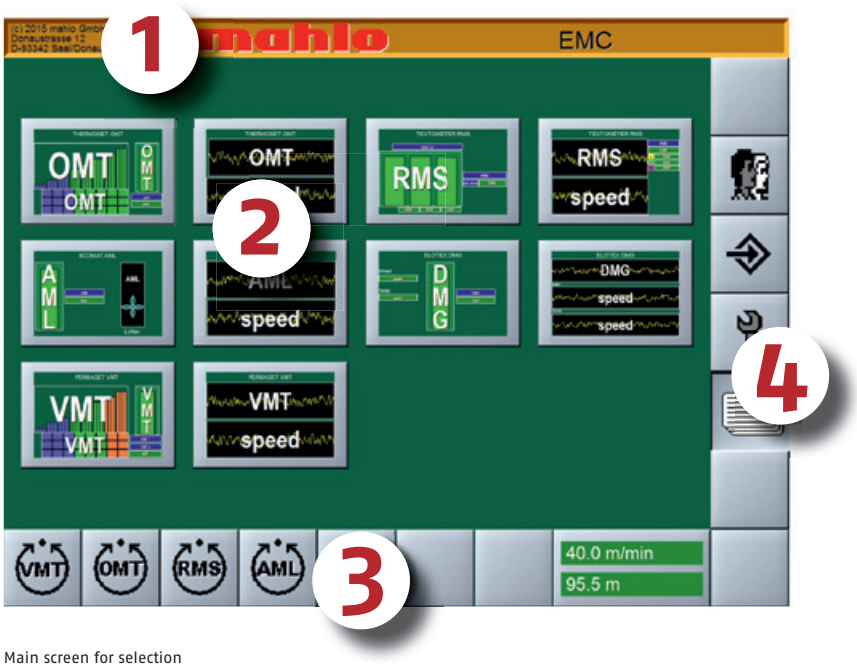

Main screen for selection

The user interface consists of four areas:

1. Title line:
General information (including alarm bar)

2. Display area:
Selectable screen pages (display forms)

3. Horizontal block:
Operating buttons for basic functions and submenu

4. Selection block:
Navigation within the operating software

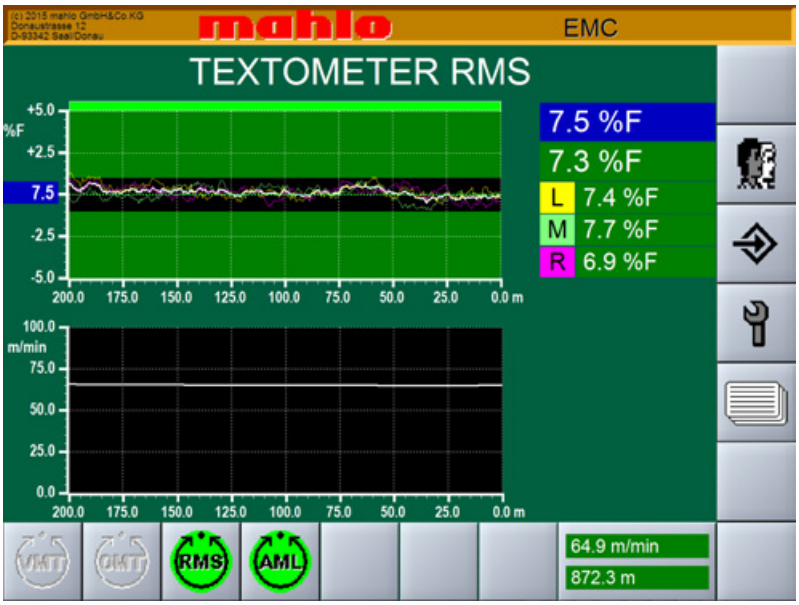

Trend diagram residual moisture and machine speed

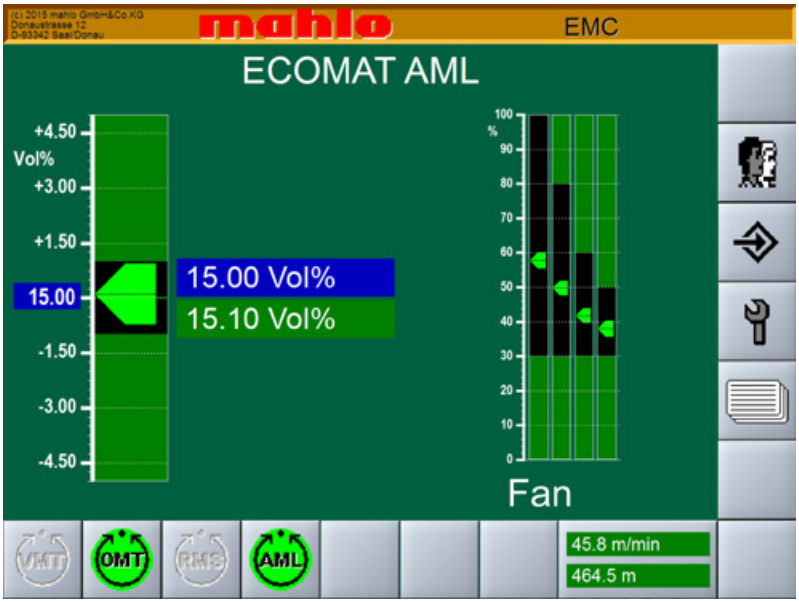

Actual value/ exhaust air moisture target value display

Product highlights

- ✓ Simultaneous management of various sensors
- ✓ Freely scalable trend diagrams
- ✓ Password protection: Unauthorised users are prevented from accessing the program

Customer benefits

- ✓ All key data at a glance
- ✓ Ergonomic user prompting
- ✓ Simple operation

VISUALIZATION

SENSORS

TEXTILE NONWOVEN COATING & CONVERTING PAPER EXTRUSION

THERMOSET OMT PERMASET VMT

DWELL TIME CONTROL

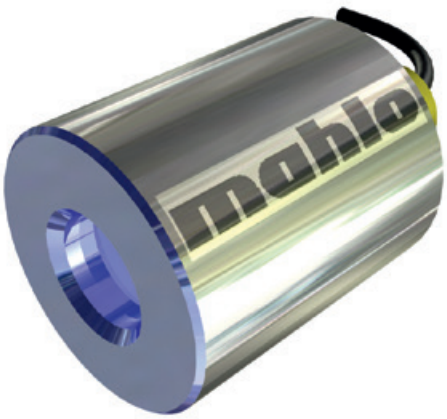

Reliable dwell time control is indispensable for maximum economy of production and maximum product quality. Permaset VMT makes a key contribution to this end.

Area of application

Without knowledge of what's happening during a fixing, thermo-isolating, condensing or gelling process in the drying chambers, the stenter has to be looked at like a block box. The user had only his own experience to fall back on. Settings for circulation temperature and stenter speed have to be determined empirically. To ensure adequate process reliability most stenters are operated with large safety margins regarding possible speeds. They are therefore far away from optimal utilisation of machine capacity and energy invested.

In many processes knowledge of what happens in the stenter is not only an economic question. The achievable product quality also depends largely on the suitable temperature and dwell time. With thermo-fixing of textiles with Lycra portions excessive product temperatures may, for example, cause the Lycra portion to loose elasticity. This would mean significant quality reduction.

To ensure repeatable processes, the use of appropriate measuring equipment in the drier chambers is essential.

Product highlights

- ✓ Non-contacting product temperature measurement
- ✓ High-temperature rated sensors
- ✓ Little assembly and maintenance effort
- ✓ Self-cleaning sensors

Benefits for the customer

- ✓ Highest repeatability
- ✓ Optimal utilisation of the stenter capacity
- ✓ Less energy required / yard goods
- ✓ Highest process reliability
- ✓ Short amortisation time
- ✓ Elimination of safety margins

Principle of operation

When wet product enters the dryer, it first heats up to the cooling limit temperature. When the water content drops to residual moisture levels, the product temperature begins to rise again. The closer the product temperature approaches the circulation air temperature in the dryer, the slower the temperature continues to rise. At a certain temperature threshold – called the fixing temperature – the temperature necessary for processing, fixing or condensing is reached.

To determine the dwell time for a desired product temperature, the surface temperature of the product is measured without contact at several locations in the dryer using high-temperature resistant infrared pyrometers. In addition, the Permaset VMT allows infrared

Thermoset OMT	1 sensor to determine product temperature
Permaset VMT	up to 64 sensors to determine the temperature profile in the stenter

pyrometers to be arranged across the width of the product (left, middle, right). The system uses the trend of the rising temperature curve to determine with point accuracy when the preselected nominal temperature has been reached.

Depending on the product properties (material composition, product weight, initial moisture) this temperature is reached at different points in the dryer, so that multiple sensors are required (normally 3 to 8, and up to 64), to ensure adequate definition of the temperature trend. If the web speed is known, this can be used to determine and thereby regulate the time period during which the product is subjected to a given temperature. In addition to the qualitative aspect of reproducible maintaining of essentially constant process conditions, productivity can also be consistently increased and energy consumption optimised, since safety margins are no longer required. The practically observed increase in productivity, depending on the article, fabric length and extent of preceding optimisation efforts, ranges up to 30 %.

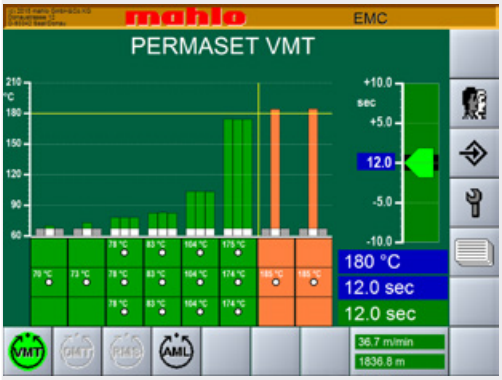

Temperature profile in the longitudinal direction of the stenter

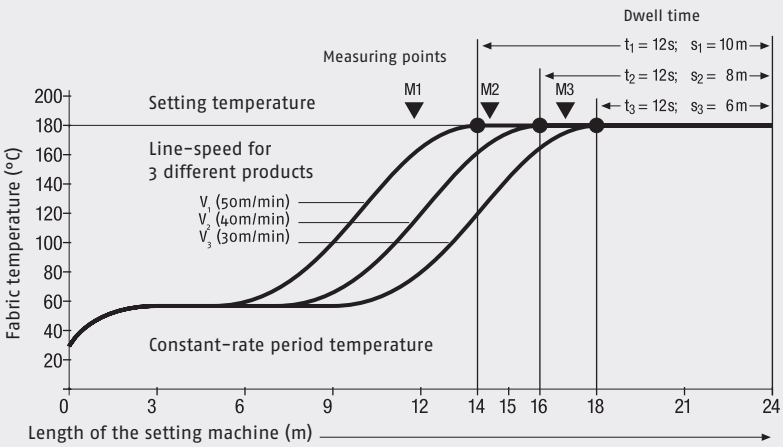

DWELL TIME REGULATION
Automatic control allows the dwell time of the product to be precisely monitored in the stenter.

SENSORS

TEXTILE NONWOVEN COATING & CONVERTING PAPER EXTRUSION

TEXTOMETER RMS

RESIDUAL MOISTURE CONTROL

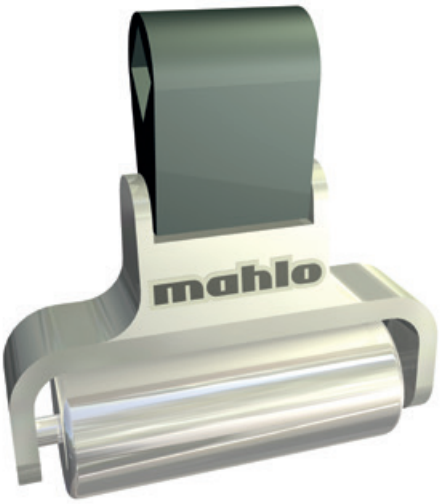

Economic drying means optimising the energy consumption and uniformity of the residual moisture to a target variable through permanent measuring of moisture and control of the drying process.

Area of application

One of the most important criteria in drying processes is the product moisture. The correct residual moisture of the product determines the economical factor in each drying procedure as well as the quality of the product and/or later finishing to a great extent.

Overdrying of the textile usually has a very negative effect on product appearance and feel. Residual moisture below the hygroscopic moisture balance results in weight loss and thus lower profits. If the textile is overdried in the stenter the drier speed drops significantly: an enormous reduction of the dryer capacity.

Principle of operation

Of the electrically measurable properties of textiles, when it comes to residual moisture, conductivity is the one most strongly dependent on the water content of the textile substrate. Moisture differences of only a few percent change conductivity exponentially. When it comes to residual moisture, neither the thickness of the measured product nor the liquor composition have even remotely as strong an effect on electrical conductivity as the quantity of water in the measured product.

With most material compositions the residual moisture can be easily determined directly by measuring the electrical conductivity. A particular advantage of this method is that different textiles show specific moistures which differ from each other while having the same electrical conductivity. The individual calibration curves which depend on the material composition are already stored in the system.

Product highlights

- ✓ Measurement of even low residual moisture values
- ✓ Highest repeatability
- ✓ Maintenance-free and reliable
- ✓ Variety of electrodes for different applications
- ✓ In special cases the left-centre-right moisture distribution can be determined

Customer benefits

- ✓ Increased productivity and quality
- ✓ Optimal residual moisture for finishing
- ✓ Optimal use of dryer capacity
- ✓ Short amortisation time
- ✓ Improved profits
- ✓ Energy savings / yard goods

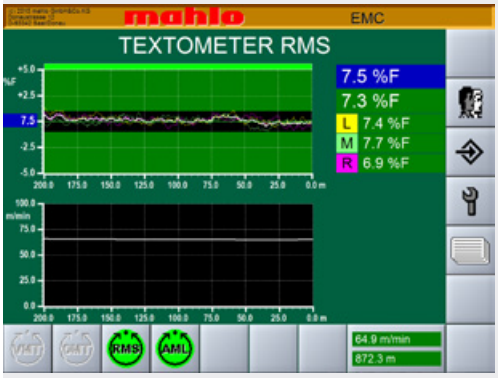

Residual moisture measurement trend diagram

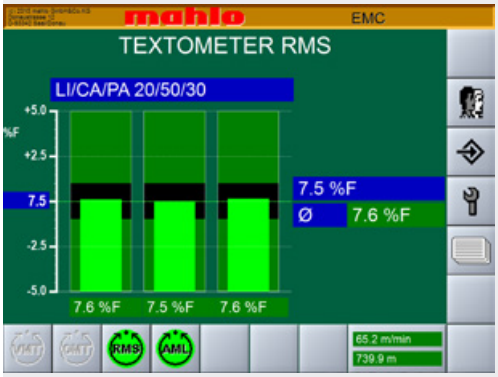

Display for moisture left, centre and right

Textometer RMS in use

The electrical resistance between two poles of an electrode is measured. Depending on the requirement this can be configured variously (e.g. electrode with a counter-roller, two rollers isolated from each other, etc.).

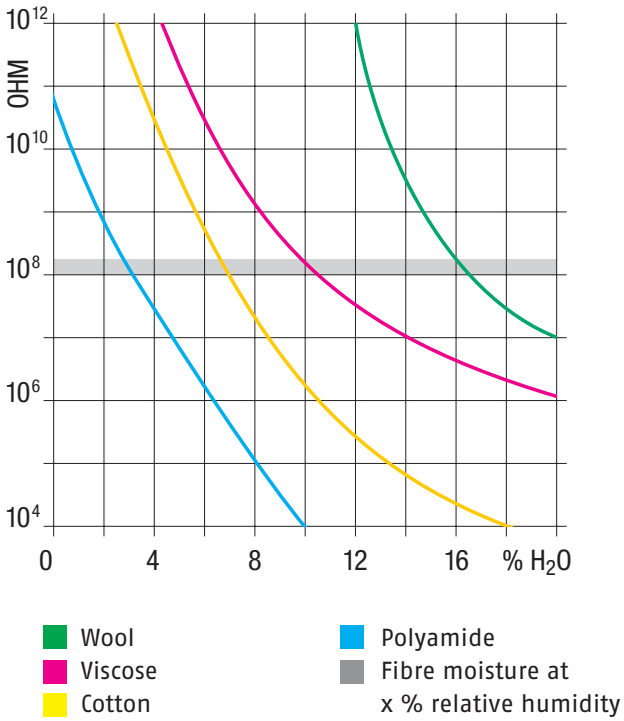

Calibration curves for various fibre types

TEXTOMETER RMS

SENSORS

TEXTILE NONWOVEN COATING & CONVERTING PAPER EXTRUSION

ECOMAT AML

Exhaust air moisture control

Much unused energy is wasted through the exhaust air during drying processes without appropriate control. The Ecomat AML adapts the heating energy to the actual demand by monitoring the vapour content of the exhaust air and controls this factor through the fan speed or the exhaust air vent control.

Area of application

Large amounts of hot air are used to permanently evaporate new water (humidity), thus transporting the resulting mixture of hot air and water vapour out of the dryer. This mixing ratio is very important for the economy of the entire drying process. The amount of water to be evaporated during any period of time depends on the product weight, incoming and residual moisture, product width and transport speed. A constant fan speed or exhaust air flap position is not economic. The exhaust air humidity needs to be constantly measured and the setting of the fan speed or exhaust air flap setting automatically regulated.

Principle of operation

The Ecomat AML measures the exhaust air humidity with a zircon oxide sensor which determines the exact steam and oxygen content. The elementary oxygen is ionised at this at a defined tension. The proportion of oxygen and steam is determined from the resulting currents. This sensor is temperature-resistant and features a kind of self-cleaning effect, since any contaminating organic substances on the hot measuring cell are immediately burned off.

This significantly reduces maintenance requirements for the sensor. The signal of the sensor is used to select an exhaust air fan or flap adjustment drive. Fans or exhaust air flaps can be controlled with

Product highlights

- ✓ Highest measuring accuracy
- ✓ Unaffected by carrier gases
- ✓ Measures oxygen, water vapour and harmful gas proportion
- ✓ Low-maintenance
- ✓ Self-cleaning
- ✓ Rugged construction

Customer benefits

- ✓ Optimised energy efficiency
- ✓ Energy saving
- ✓ Increased process repeatability
- ✓ Quality improvement
- ✓ Short amortisation time

Typical sensor installation

up to four control outputs. The display of the measured absolute moisture can take place in vol.-% H_2O, g/kg or °C dew point.

The graph shows to what degree the heating costs of a dryer are dependent on the required volume of fresh air and thereby the vapour content in the exhaust air. Whereas the evaporation curve is relatively flat, the cost index quickly rises especially for a wideopen exhaust air flap, i.e. low vapour content. The fan speed should be set so that the humidity in the exhaust air is as high as possible without noticeably reducing production output.

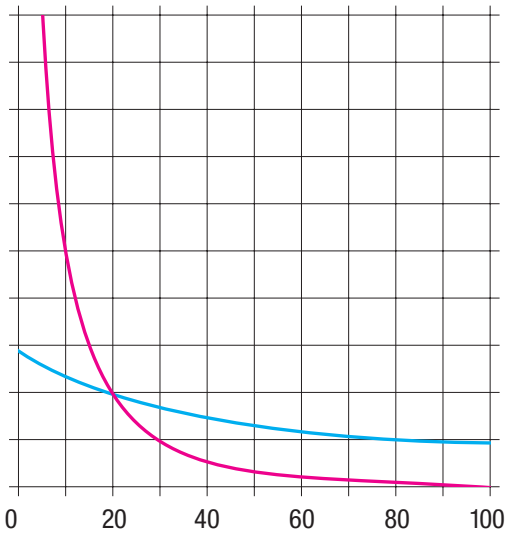

Relative fresh air volume, cost index

Relative evaporator output

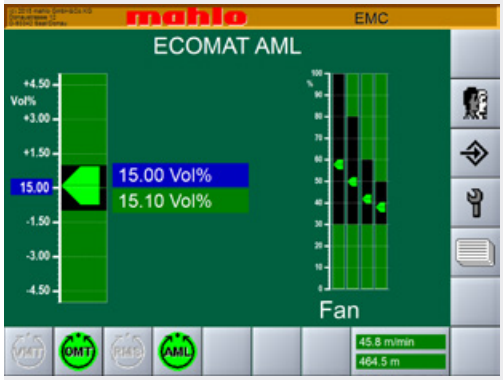

Actual value/ target value display

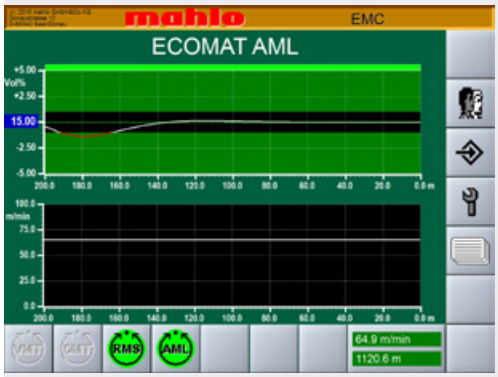

Exhaust air moisture trend diagram

KNOWLEDGE

We have a common goal: Maximum performance for your system. To this end we are by your side from installation to maintenance of the machines to training of your employees. We provide comprehensive training to your staff for operation and maintenance. You will thus be able to solve problems even faster.

TECHNICAL DATA | BASIS

Basis	Ecopac EMC
Power connection	1 x 230 VAC, 50/60 Hz, transformer station available for other voltages
Power consumption, max.	3.0 kVA
Temperature range (standard)	+5 – +45 °C
Temperature range (with A/C unit)	+5 – +50 °C
Temperature range control and display station	-20 – +45 °C
Relative humidity (non-condensing)	0 – 95 %
Maximum setup elevation a.s.l.	1000 m
IP protection class	IP 54
Dimensions	600 x 990 x 485 mm (W x H x D) (with A/C unit)
Weight	77 kg (with A/C unit)

Dimensions

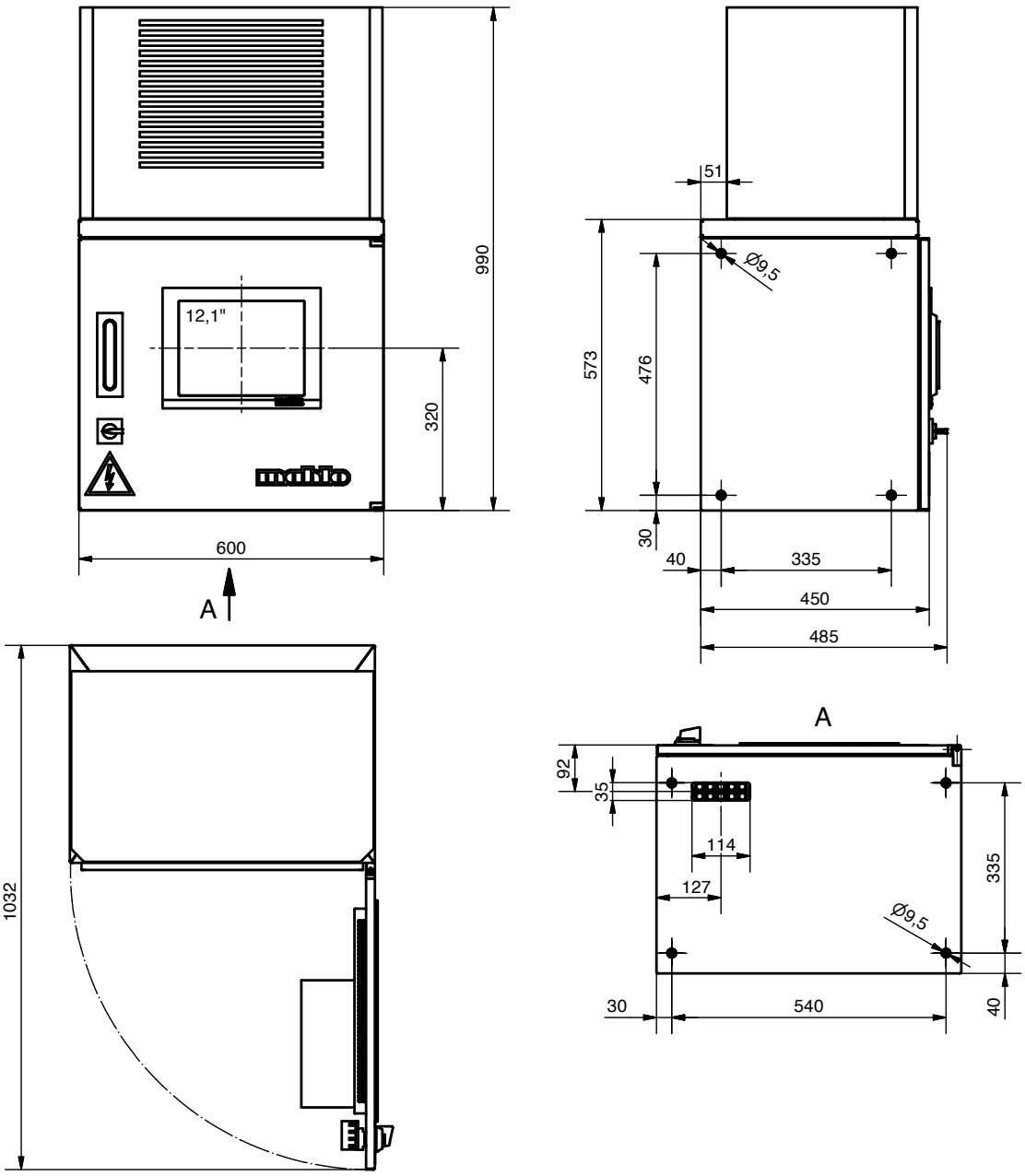

Ecopac EMC-15 Basis
91-014113

BASIS

TECHNICAL DATA | THERMOSET OMT • PERMASET VMT

TEXTILE NONWOVEN COATING & CONVERTING PAPER EXTRUSION

Sensor	Thermoset OMT / Permaset VMT
Measuring range	0 – 250 °C
Measuring field	Field of view 120°
Measuring accuracy	≤ 1 % of readout range at 23 °C
Response time	$t_{0,9}$ = 6 s
Output signal	CAN, analogue 0 – 20 mA
Temperature range	Measuring amplifier: 0 – +85 °C Sensor with cable: 0 – +250 °C
Climate class	KPA according to DIN 40040

Mechanical Data	Sensor	Measuring amplifier
Design	Stainless steel housing, 6 m connecting cable in Teflon design	Aluminium die-cast housing
IP protection class	IP 65	IP 67

Dimensions

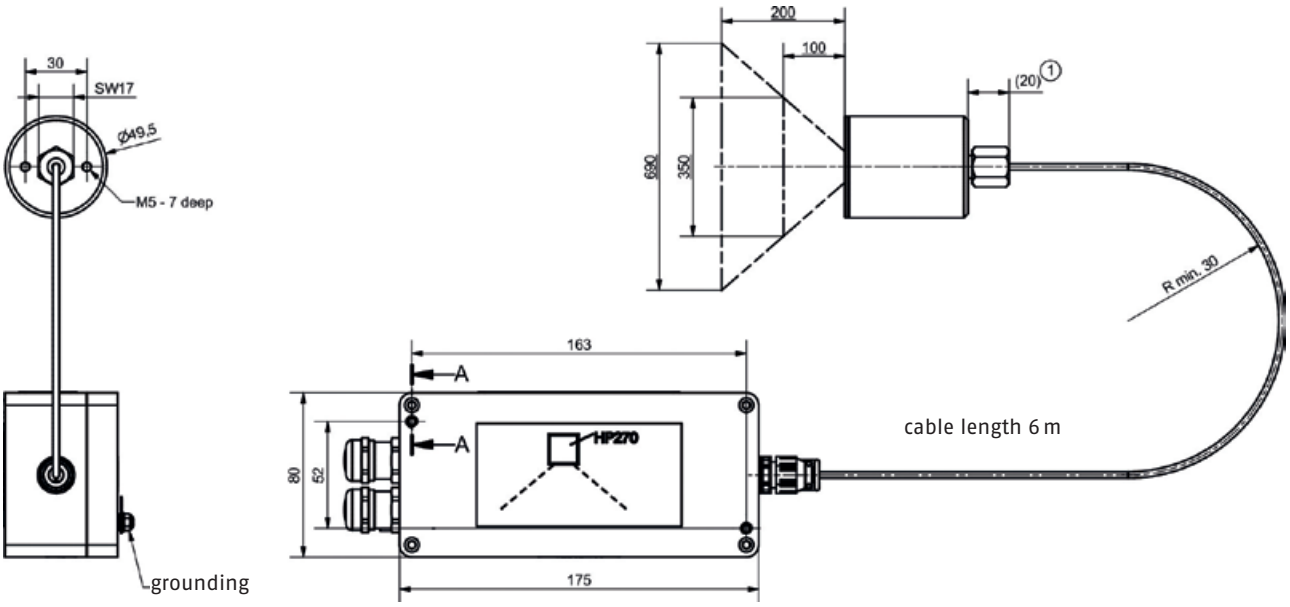

Sensor Permaset VMT
91-015449

FIRST AID

You can count on our service team, especially when 'first-aid' is required. A call is all it takes to get our technicians on-site. Around the clock – and around the globe. So that you can concentrate on your work without worry.

Online-Support:
SERVICE@MAHLO.COM

Support-Hotline:
+49-(0)180-50 62 456

TECHNICAL DATA | TEXTOMETER RMS • ECOMAT AML

TEXTILE NONWOVEN COATING & CONVERTING PAPER EXTRUSION

Sensor	Textometer RMS
Fibre types and mixtures	Freely selectable from the list, calibration curves stored; not suitable for isolators (glass, 100 % PA, etc.) or electrical conductors (metal fibres or filaments))
Measuring range	Depending on fibre type, fibre mixture and electrode type Examples: - Cotton: 3 – 20 % - Linen: 7 – 43 % - Linear scale: 0 - 100 scale (low humidity electrode: from 1 %)
Measurement display	Standard electrode (1-channel): highest moisture value 3-channel electrode: highest value, lowest value or arithmetical average
Temperature range	Measuring amplifier: 0 – +50 °C
Measuring electrodes	Different versions for outside attachment or inside installation in sizing machines and driers of all types. Dimensions and weights according to design.

Dimensions

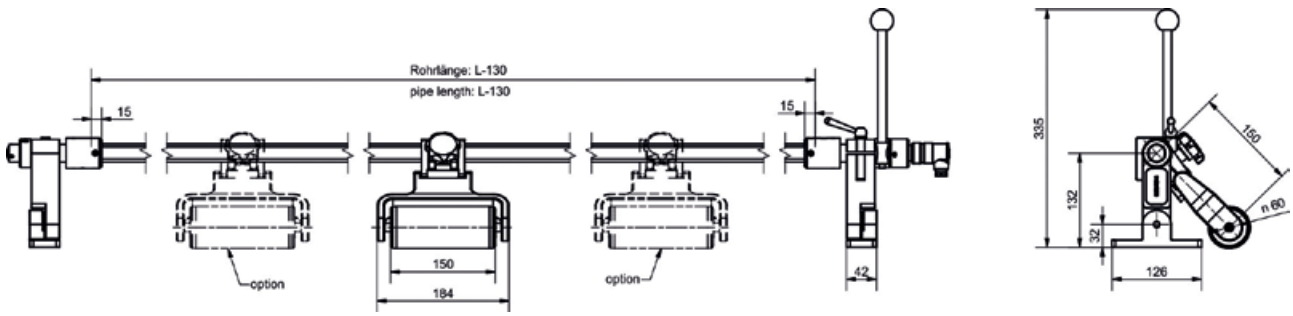

Sensor TEXTOMETER RMS
91-013151-07

Sensor	Ecomat AML
Measuring range	H_2O 0 – 100 vol.-%
Measuring accuracy	≤ 2 vol.-% of the top-end of range
Output signal	0 – 20 mA, 4 – 20 mA
Temperature range	Measuring amplifier: 0 – +65 °C Sensor: 0 – +300 °C
Climate class	JWE according to DIN 40040

Mechanical Data	Sensor	Measuring amplifier
Design	Stainless steel housing	Aluminium die-cast housing
Protection class	Only measuring gas allowed	IP 67

Dimensions

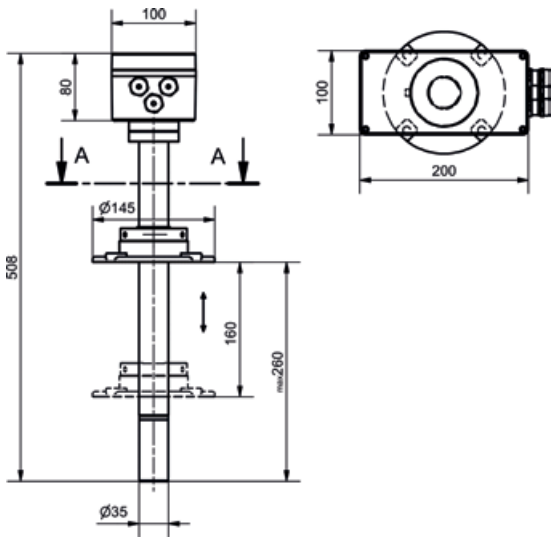

Sensor ECOMAT AML
91-015470-01

mahlo
trendsetting technology. worldwide.
since 1945

Monitoring and control systems, automation:

MAHLO® GUARANTEES QUALITY. WORLDWIDE, IN YOUR VICINITY.

Best-possible technical support and transfer of know-how are written in capital letters at Mahlo®. Thanks to an international network of agencies and service centres, customers have at their disposal competent support worldwide. We are there for you 365 days a year, 24 hours a day. Just get in touch with us!

- ✓ Over 40 service centres worldwide
- ✓ Service partners in over 100 countries
- ✓ Direct service and supply of spare parts within 24 hours
- ✓ Remote diagnostic system
- ✓ Service-hotline: +49-180-5062456

Mahlo GmbH + Co. KG Germany
Donaustr. 12, 93342 Saal/Donau
Tel.: +49-9441-601-0
Fax: +49-9441-601-102
info@mahlo.com

Mahlo Italia S.R.L. Italy
Via Fiume 62, 21020 Daverio
Tel.: +39-0332-94-95-58
Fax: +39-0332-94-85-86
mahlo.italia@mahlo.com

Mahlo America Inc. USA
P.O. Box 2825, Spartanburg, S.C. 29304
Tel.: +1-864-576-62-88
Fax: +1-864-576-00-09
mahlo.america@mahlo.com

Mahlo Ouest S.P.R.L. Belgium
Quartum Center
Hütte 79 - Bte 10
4700 Eupen
Tel.: +32-87-59-69-00
Fax: +32-87-59-69-09
mahlo.ouest@mahlo.com

Mahlo España S.L. Spain
C/ Santa Margarida, s/n - Nave nº13
Polígono Industrial Riera de Caldes
- Boada Vell
E08184 Palau Solità i Plegamans (Barcelona)
Tel.: +34-938-640-549
mahlo.espana@mahlo.com

Mahlo do Brasil Ltda. Brazil
Rua dos Lírios 849 e 851
Cidade Jardim II - Americana – SP
Brasil CEP- 13466-580
Tel.: +55-19-3407-7954 / +55-19-3601-7363
Fax: +55-19-3405-4743
mahlo.brazil@mahlo.com

WWW.MAHLO.COM

Quality made in Germany

ECOPAC EMC-15 84-010459-002-en